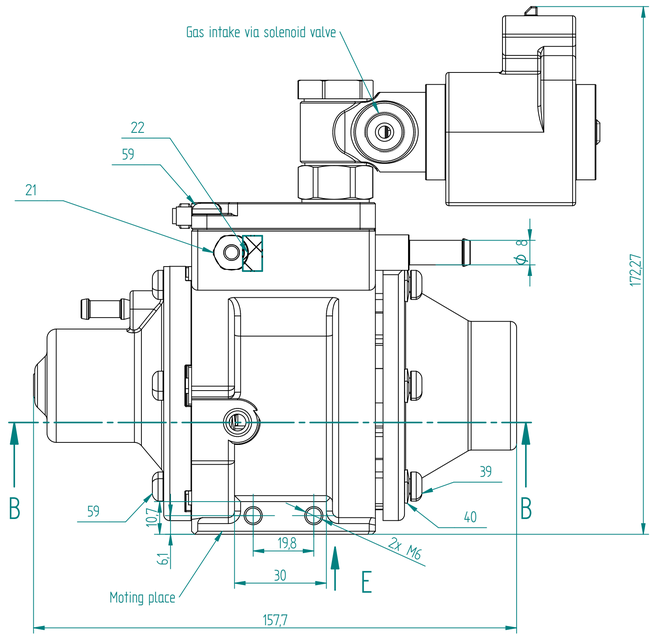

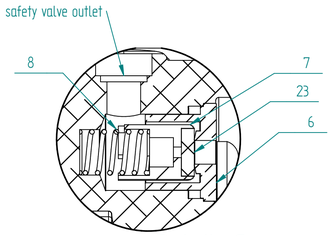

Safety valve Detail C

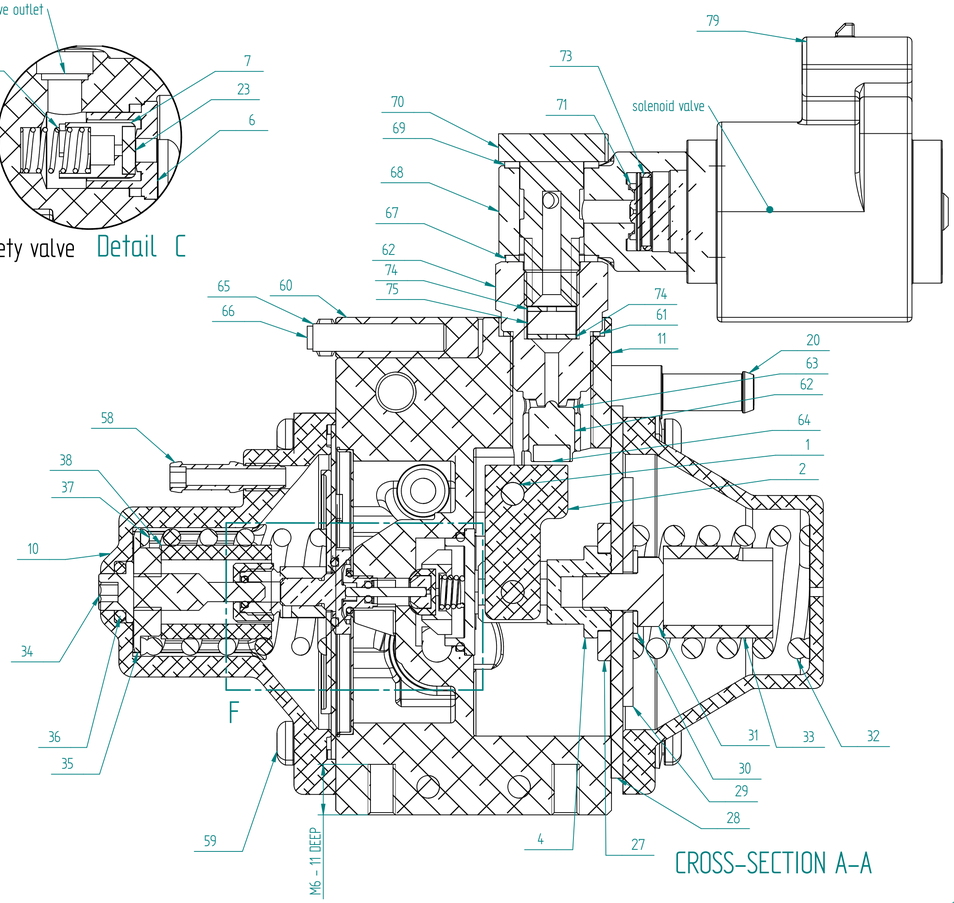

CROSS-SECTION A-A

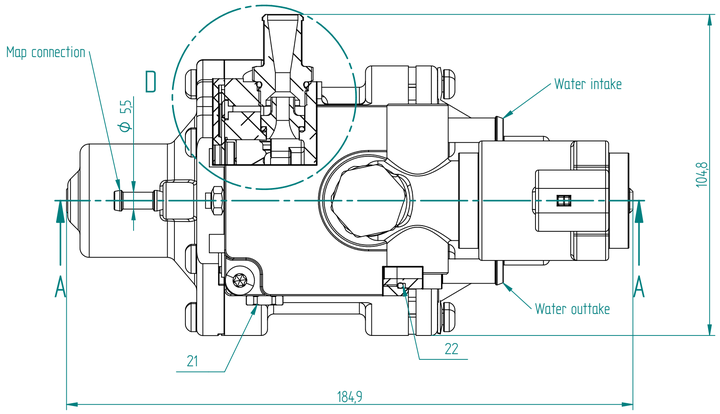

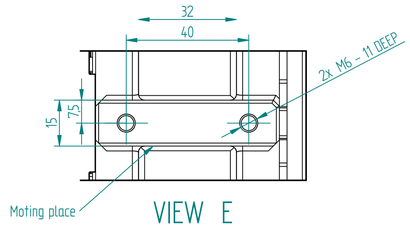

VIEW E

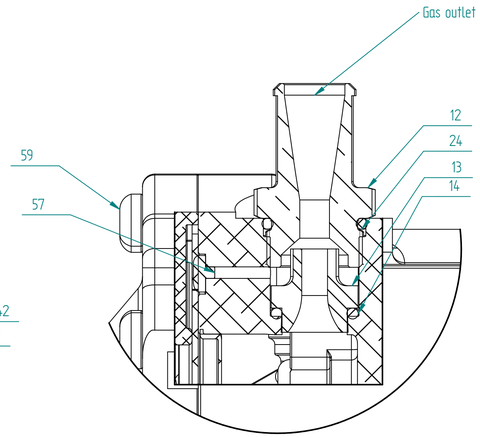

DETAIL D

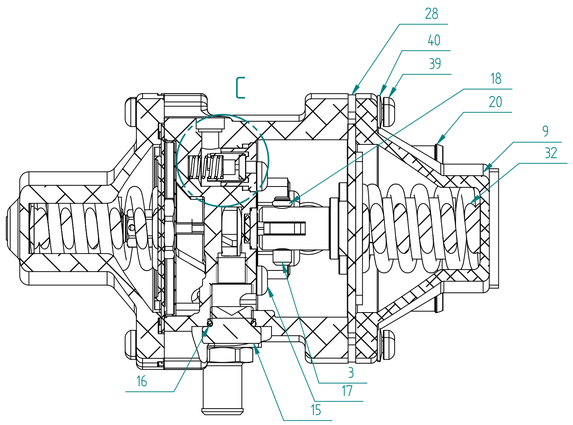

CROSS-SECTION B-B

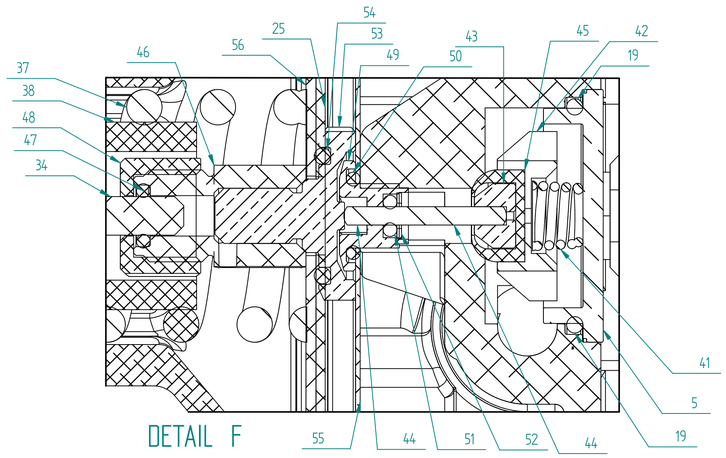

DETAIL F

Mechanical Body LICENSE: CERN Open Hardware Licence v2 - Weakly Persistent (CERN-OHL-W v2) SOURCE: https://ohwr.org/cernohl

! WARNING: HIGH-PRESSURE CNG SYSTEM EXPLOSION HAZARD: This design involves a high-pressure Compressed Natural Gas (CNG) system. Improper manufacturing, incorrect material selection, or failure to meet dimensional tolerances may lead to catastrophic failure, fire, or explosion. * LIABILITY: The Author and SCALMAX company shall not be held liable for any damages, injuries, or losses resulting from the use or manufacturing of this documentation. USER RISK: Manufacturing and testing of this device are performed at the user's own risk. Pressure testing is mandatory after assembly. BUILD AT YOUR OWN RISK.

Nr:	Component Number	Component Name	Material	Qty.
1	SMPM013.01.06	Dowel pin Φ 5x21	AISI 304	1
2	SMPM013.01.07	Lever	ANSI 304	1
3	SMPM013.01.08	Dowel pin Φ 6x22	AISI 304	1
4	SMPM013.01.09	Diaphragm tie-beam	MO58A	1
5	SMPM013.01.10	Second stage valve plug	MO58A	1
6	SMPM013.01.11	Safty valve cup	MO58A	1
7	SMPM013.01.12	Safty spring cage	ABS	1
8	SMPM013.01.13	Spring 12xΦ6xΦ1	AISI 304	1
9	SMPM013.01.14	Spring case	Aluminium, 6061-T6	1
10	SMPM013.01.17	Spring cage with Map	6061-T6	1
11	SMPM013.01.25	Regulator body	6061-T6	1
12	SMPM013.01.47	Fitting Φ13xM16x1	MO58A	1
13	SMPM013.01.75	Venturi nozzle	PA6	1
14	SMPM013.01.76	Oring Φ11xΦ1,78	HNBR	1
15	SMPM013.01.77	Drain plug M14x1	MO58A	1
16	SMPM013.01.78	Oring Φ12xΦ1,78	Rubber	1
17	SMPM013.01.84	Bolt M5x8 DIN 7985	AISI 304	5
18	SMPM013.01.85	Oring Φ2,9xΦ6,46	Rubber	1
19	SMPM013.01.86	Oring Φ11xΦ1,78	Rubber	1
20	SMPM013.01.87	Coolant fitting	MO58A	2
21	SMPM013.01.88	Coolant heat exchanger plug	MO58A	2
22	SMPM013.01.89	Oring Φ7,6xΦ1,78	Rubber	5
23	SMPM013.01.90	Seafty valve sealing	Rubber	1
24	SMPM013.01.91	Oring Φ14xΦ1,78	Rubber	1
25	SMPM013.01.15	Diaphragm	NBR	1
27	SMPM013.01.44	Washer M16	AISI 304	1
28	SMPM013.01.43	Diaphragm	NBR	1
29	SMPM013.01.42	Washer Φ50xΦ9x2,2	AISI 304	1
30	SMPM013.01.02	Washer M8x8,4x18x1 BN 802	AISI 304	1
31	SMPM013.01.39	Bolt M8x12	AISI 304	1
32	SMPM013.01.40	Spring 50xΦ29xΦ4,5	AISI 304	1
33	SMPM013.01.41	Buffer	Rubber	1
34	SMPM013.01.20	Pressure regulation bolt	AISI 304	1
35	SMPM013.01.19	Pressure regulation nut	AISI 304	1
36	SMPM013.01.94	Oring Φ8xΦ2,5	Rubber	1
37	SMPM013.01.05	Spring 54xΦ27,5xΦ3,85	AISI 304	1
38	SMPM013.01.03	Buffer	Rubber	1
39	SMPM013.01.96	Bolt M5x25	AISI 304	6
40	SMPM013.01.95	Spring washer M5	AISI 304	6
41	SMPM013.01.38	Cone spring 8,5xΦ8xΦ1	AISI 304	1
42	SMPM013.01.34	Secound stage spring support	ABS	1
43	SMPM013.01.32	Poppet	MO58A	1
44	SMPM013.01.83	Dowle pin Φ 2x18	AISI 304	1
45	SMPM013.01.33	Poppet sealing	NBR	1
46	SMPM013.01.28	Diaphragm mouting nut	AISI 304	1
47	SMPM013.01.29	Oring Φ4x1,5	Rubber	1
48	SMPM013.01.27	Adjusting tie-rod sealing nut	AISI 304	1
49	SMPM013.01.35	Adjusting pressure tie-rod support/sealing	MO58A	1
50	SMPM013.01.36	Oring Φ6,5xΦ1,5	Rubber	1
51	SMPM013.01.82	Oring Φ3xΦ1,5	Rubber	1
52	SMPM013.01.81	Washer Φ5xΦ2,75	CuZn33	1
53	SMPM013.01.30	Diaphragm mouting bolt	MO58a	1
54	SMPM013.01.37	Oring Φ11,2xΦ2	Rubber	1
55	SMPM013.01.45	Compartment	AISI304	1
56	SMPM013.01.18	Diaphragm washer	AISI 304	1
57	SMPM013.01.46	Vacuum pressure bushing	ABS	1
58	SMPM010.02 Fi 35 (L = 252)	Map fitting	MO58A	1
59	SMPM013.01.97	Bolt M5x20 ISO 7045	AISI 304	8
60	SMPM013.01.21	Electric heat exchanger body	Aluminium, 6061-T6	1
61	SMPM013.01.74	Copper washer Φ18x¹⁄₂DI21	Copper	1
62	SMPM013.01.65	Reducer inlet bolt	MO58A	1
63	SMPM013.01.72	Poppert	MO58A	1
64	SMPM013.01.73	Valve buffer	PA6	1
65	SMPM013.01.49	Electrical heater	AISI 304	2
66	SMPM013.01.48	Temperature sensor	AISI 304	1
67	SMPM013.01.70	Copper washer Φ20xΦ14,2x1,5	Miedź	1
68	SMPM013.01.71	Solenoind valve fitting	MO58A	1
69	SMPM013.01.69	Copper washer M14	Miedź	1
70	SMPM013.01.68	Banjo bolt M12x1	AISI 304	1
71	SMPM013.01.58	Solenoid poppet	MO58A	1
73	SMPM013.01.60	Oring Φ13xΦ1,5	Guma	1
74	SMPM013.01.67	Filter sieve	AISI 304	2
75	SMPM013.01.66	Gas filter	Felt	1
79	SMPM013.01.50	Solenoid valve	PA6	1

TOLERANCJE NIEOZNACZONE	0,5 -3	>3 -6	>6 -30	>30 -120	>120 -400	>400 -1000	>1000 -2000
DIN ISO 2768 F	±0,05	±0,05	±0,10	±0,15	±0,20	±0,30	±0,50

OBRÓBKA		scalmax advanced autogas technology	TYTUŁ Reducer		
MATERIAŁ					
WYMIARY W JEDNOSTKACH - mm			MASA 2,249 kg		
NARYSOWAŁ	Jakub Sierski	29/03/23	NUMER RYSUNKU SMPM013.01.00	FORMAT A1	NIENANIESIONE WYMIARY NA PODSTAWIE MODELU 3D
ZATWIERDZIŁ				SKALA 1:1	ARKUSZ 1/47